MERCRUISER (BRAVO ONE)
Serial Nbr Range: 0B664190 THRU 0F729999 ()

DRIVE SHAFT HOUSING AND DRIVE GEARS

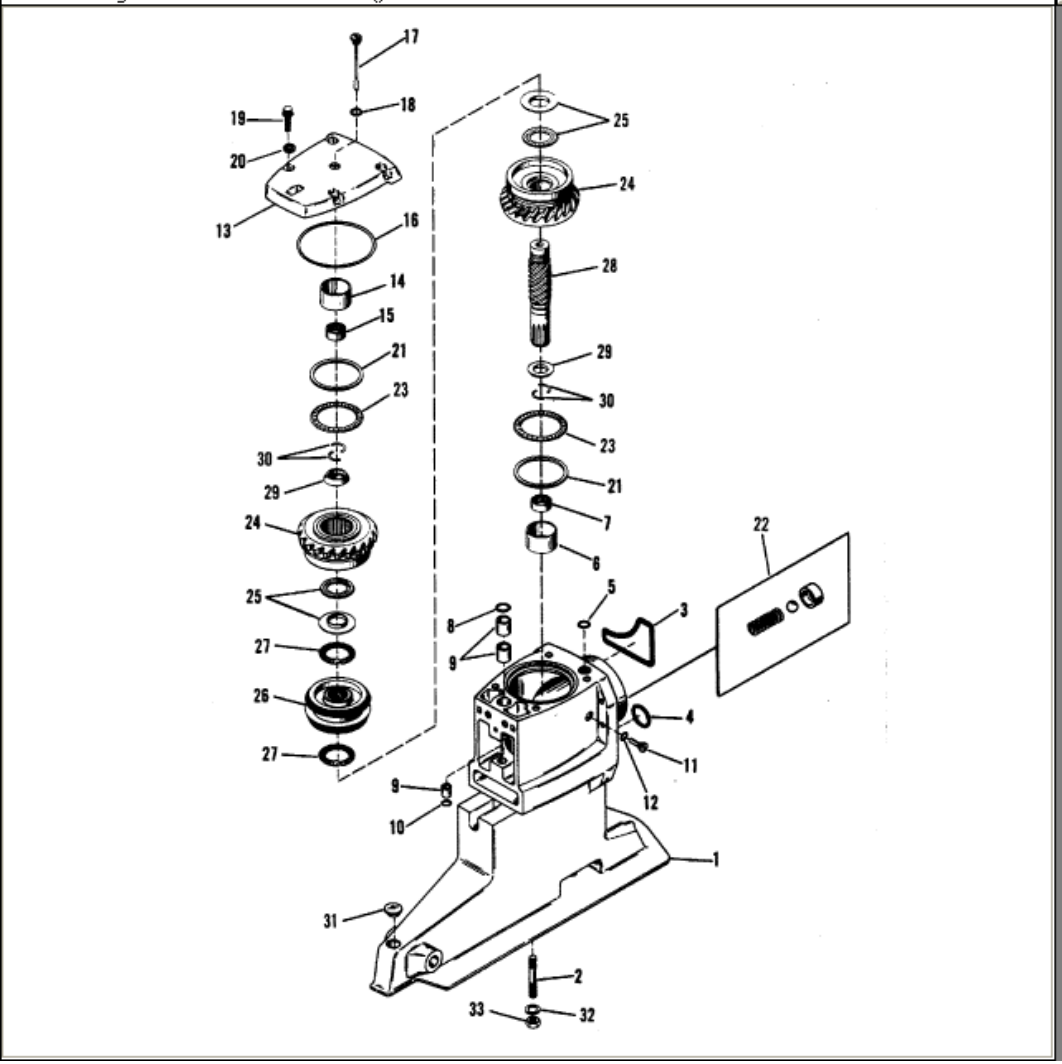

Parts List

Ref	Class	Part	Description	Qty	Comment	Footnote
1	1589	8868A15	DRIVESHAFT HOUSING	1		1
1	1589	8868A55	DRIVESHAFT HOUSING	1		7
2	16	57920 1	STUD, (.437-14/.437-20 x 2.060)	4		
3		16755	SEAL	1		9
4	25	45710	O-RING, (1.424 x .103)	1		9
5	25	62706	O-RING, (.426 x .070)	1	(OLD DESIGN)	9
6	31	815900	BEARING	1		
7	31	87156	BEARING ASSEMBLY, Roller	1		
8	25	62705	O-RING	1		9
9	23	12707A 1	BUSHING KIT	1		
10	26	12709	SEAL, Oil	1		9
11	10	14834A 1	SCREW	1		
12	12	19183	WASHER, Fiber	1		9
13		92068A 2	TOP COVER, O-Ring on DSH	1		
13		92068A 6	TOP COVER, O-Ring on Top Co\	1		
14	31	815900	BEARING	1		
15	31	87156	BEARING ASSEMBLY, Roller	1		
16	25	97387	O-RING	1		9
17		86774A 1	DIPSTICK ASSEMBLY	1	(OLD DESIGN)	
18	12	19183	WASHER, Fiber	1	(OLD DESIGN)	9
19	10	58640	SCREW, (.375-16 x 1.25)	4		
21	23	87560091	THRUST BEARING, (.091), Red	AR		14
21	23	87560094	THRUST BEARING, (.094), Light	AR		14
21	23	87560097	THRUST BEARING, (.097), Gree	AR		14
22	24	17997A 1	SPRING KIT	1		
23	31	86771	BEARING, Thrust	2		
24	43	807436A 1	GEAR KIT, 32 TEETH:(1.5:1 - 2.00	1	SN# 0F345867 & Below	
24	43	807438A 1	GEAR KIT, 29 TEETH: (1.81:1 - 1.:	1	SN# 0F345867 & Below	
24	43	807437A 1	GEAR KIT, 30 TEETH: (2.20:1 Rat	1	SN# 0F345867 & Below	
24	43	826643A 1	GEAR, 32 Teeth:(1.50-2.00:1 Ratio	2	SN# 0F345868 & Up	
24	43	815662A 3	GEAR, 29 Teeth:(1.81:1-1.36.1 Rat	2	SN# 0F345868 & Up	
24	43	818665A 1	GEAR, 30 Teeth:(2.20:1 Ratio) (1.6	2	SN# 0F345868 & Up	
25	31	86768A 2	THRUST BEARING ASSEMBLY	1		
26		NSS	NOT SOLD SEPARATE	1		
26	52	807375A 1	CLUTCH AND CAM KIT, Refer To	1	SN# 0F345868 & Up	
27		NSS	NOT SOLD SEPARATE	2		
28	45	96061T	DRIVESHAFT, Upper	1	(Must Use 2 Thrust Collars and 4 K	
28	45	812773T	DRIVESHAFT, Upper	1	(Must Use 2 Thrust Collars and 4 K	
29	23	86770	COLLAR	2	(Must Use 2 Thrust Collars and 4 K	
29	23	86770	COLLAR	1	(Must Use 2 Thrust Collars and 4 K	
30		97351	KEEPER	2	(Must Use 2 Thrust Collars and 4 K	9